PUNCH GUIDE BUSHINGS
—EXTRA LONG—

—Headed— RoHS

Shank diameter D T	M H	D dimension	Catalog No.
D_{m5}	Equivalent to SKH51 61～64HRC	D4・5	SLMHG
	Equivalent to SKD11 60～63 HRC	D6～10	

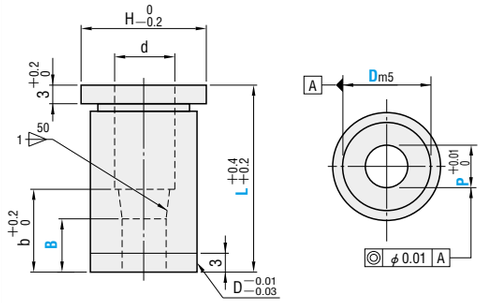

—Straight— RoHS

Shank diameter D T	M H	D dimension	Catalog No.
D_{n5}	Equivalent to SKH51 61～64HRC	D4・5	SLMSG
	Equivalent to SKD11 60～63 HRC	D6～10	

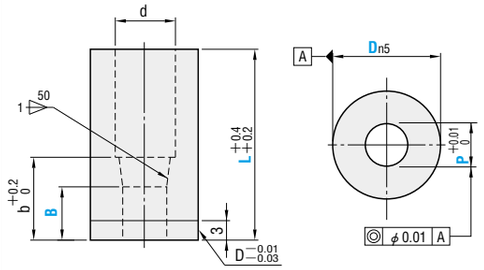

D tolerance D	m5	n5	Catalog No. Type	D	L			0.01mm increments min. P max.	0.1mm increments B	b	d	H
4	+0.009 +0.004	+0.013 +0.008	Headed type (D_{m5}) SLMHG	4	16	20		0.80 ～ 1.50	2≦B≦b and B≦(P×5)	10	2.4	5
5				5	16	20	25	0.80 ～ 2.00		11	2.9	6
6			Straight type (D_{n5}) SLMSG	6	16	20	25	1.00 ～ 2.50		12	3.4	9
8	+0.012 +0.006	+0.016 +0.010		8	16	20	25	1.00 ～ 3.50		14	4.4	11
10				10	16	20	25	2.00 ～ 5.50			6.4	13

■Features Because of the long guide length (B dimension), these bushings can be used for drawing and bending in which the punch must be guided over a long stroke.

Price Quotation

Order

Catalog No.	L	P	B
SLMHG 4	16	P0.80	B3.5
SLMSG 5	16	P1.01	B4.0

Days to Ship Quotation

Alterations

Catalog No.	L(LC)	P	B	(HC・TC, etc.)
SLMHG 8	LC15.0	P3.01	B10.0	HC10.0

Alterations	Code	Spec.	1Code
Alterations to full length	LC	Full length change (reduction in tip length) 10≦L−(B−1)≦LC<L 0.1 mm increments (If combined with LKC・LKZ, 0.01 mm increments can be selected.) Tip length b is shortened by (L−LC).	Quotation
		Full length change 10≦L−(B−1)≦LC<L 0.1 mm increments (If combined with LKC・LKZ, 0.01 mm increments can be selected.)	
	LKC	Full length tolerance change L +0.4 +0.2 ⇨ +0.05 0	
	LKZ	Full length tolerance change L +0.4 +0.2 ⇨ +0.01 0 ⊗ Cannot be used for L(LC)<16.	

Alterations	Code	Spec.	1Code
Alterations to head	HC	Head diameter change D≦HC<H 0.1 mm increments	Quotation
	TC	Head thickness change 2≦TC<3 0.1mm increments If combined with TKC・TKM, 0.01mm increments can be selected. Full length is shortened by (3−TC). If combined with LC, full length is equal to LC.	
	TKC	Head thickness tolerance change T +0.2 0 ⇨ +0.02 0 ⊗ Cannot be used for L(LC)<16.	
	TKM	Head thickness tolerance change T +0.2 0 ⇨ 0 −0.02 ⊗ Cannot be used for L(LC)<16.	

PUNCH GUIDE BUSHINGS
—DOUBLE-STEPPED GUIDE TYPE—

—Headed type— RoHS

M H	D dimension	Catalog No.
Equivalent to SKH51 61～64HRC	D3～5	FMHG
Equivalent to SKD11 60～63 HRC	D6・8	

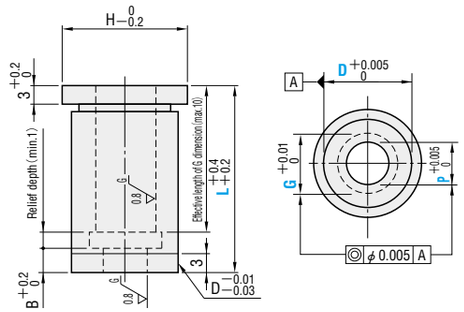

—Straight— RoHS

M H	D dimension	Catalog No.
Equivalent to SKH51 61～64HRC	D3～5	FMSG
Equivalent to SKD11 60～63 HRC	D6・8	

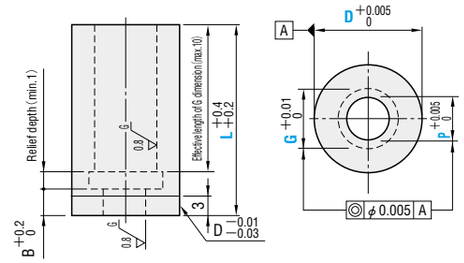

Catalog No. Type	D	L				0.01mm increments min. P max.	min. G max.	B	H
Headed type ($D^{+0.005}_{0}$) FMHG	3	10	13	16		0.80 ～ 1.98	2.00	2	4
	4	10	13	16		0.80 ～ 2.38	2.00 ～ 2.40		5
	5	10	13	16		0.80 ～ 2.88	2.00 ～ 2.90		6
Straight type ($D^{+0.005}_{0}$) FMSG	6	10	13	16	20	0.80 ～ 3.38	3.00 ～ 3.40	3	9
	8	10	13	16	20	0.80 ～ 4.38	3.00 ～ 4.40	4	11

Bushing under the head and at the relief hole may be thin. Be careful not to damage the bushings when mounting them. If D=3, only 2.00 can be selected for G dimension.

Order

Catalog No.	L	P	G
FMHG 3	10	P0.80	G2.00
FMSG 5	16	P1.01	G2.50

Price Quotation

Days to Ship Quotation

Alterations

Catalog No.	L(LC)	P	G	(HC・TC, etc.)
FMHG 8	LC15.0	P3.01	G4.00	HC10.0

Alterations	Code	Spec.	1Code
Alterations to full length	LC	Full length change (reduction in tip length) 10≦L−(B−1)≦LC<L 0.1 mm increments (If combined with LKC・LKZ, 0.01 mm increments can be selected.)	Quotation
		Full length change 10≦L−(B−1)≦LC<L 0.1 mm increments (If combined with LKC・LKZ, 0.01 mm increments can be selected.)	
	LKC	Full length tolerance change L +0.4 +0.2 ⇨ +0.05 0	
	LKZ	Full length tolerance change L +0.4 +0.2 ⇨ +0.01 0 ⊗ Cannot be used for L(LC)<16.	

Alterations	Code	Spec.	1Code
Alterations to head	HC	Head diameter change D≦HC<H 0.1 mm increments	Quotation
	TC	Head thickness change 2≦TC<3 0.1mm increments If combined with TKC・TKM, 0.01mm increments can be selected. Full length is shortened by (3−TC). If combined with LC, full length is equal to LC.	
	TKC	Head thickness tolerance change T +0.2 0 ⇨ +0.02 0 ⊗ Cannot be used for L(LC)<16.	
	TKM	Head thickness tolerance change T +0.2 0 ⇨ 0 −0.02 ⊗ Cannot be used for L(LC)<16.	