**Cylinder with Twin Guides**

RoHS10

| Type | Plain Bushing | Linear Bushing | Features |
|---|---|---|---|
| Standard Stroke | MGCLF | MGCLB | Standard Stroke Type is available |
| Spacer Installed Type | MGCLFN | MGCLBN | Intermediate strokes can be configured in 1 mm increments (Spacer Fitted) |

No cylinder sensor is included in any of these types.

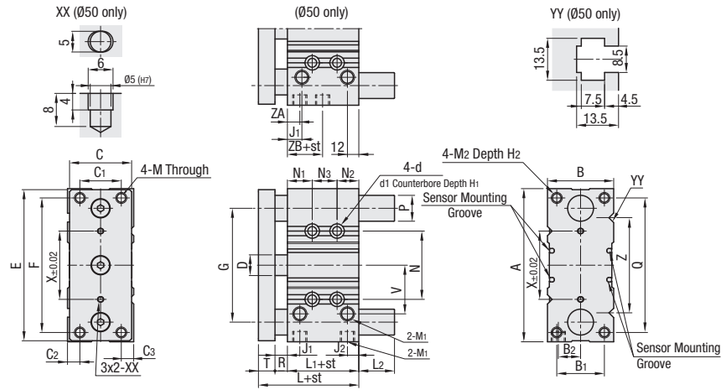


**Application Example**

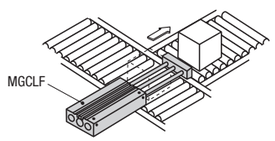


Back Side

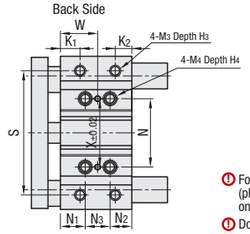


Operating Temperature Range: 5–60°C

For material, surface treatment and the accessory (plugs), refer to Cylinders with Twin Guides -Overview on **P.3592**

Dowel Holes (X±0.02) are for Ø50 cylinders only.

| Tube I.D. (mm) | A | B | $B_1$ | $B_2$ | C | $C_1$ | $C_2$ | $C_3$ | d | $d_1$ | D | E | F | G | $H_1$ | $H_2$ | $H_3$ | $H_4$ | $J_1$ | $J_2$ | $K_1$ | $K_2$ | L | $L_1$ |
|---|---|---|---|---|---|---|---|---|---|---|---|---|---|---|---|---|---|---|---|---|---|---|---|---|
| 12 | 58 | 26 | 18 | 8.5 | 22 | 14 | 6 | 6 | 4.3 | 8 | 6 | 56 | 48 | 41.5 | 4.5 | 9 | 7 | 10 | 11 | 15 | 12 | 12 | 39 | 29 |
| 16 | 64 | 30 | 22 | 10 | 25 | 16 | 7 | 7 | 4.3 | 8 | 8 | 62 | 52 | 46 | 4.5 | 11 | 7 | 10 | 11 | 17 | 11 | 13 | 43 | 31 |
| 20 | 85 | 36 | 26 | 11.5 | 30 | 18 | 8 | 10 | 5.2 | 9.5 | 10 | 72 | 60 | 55 | 5.5 | 13 | 7 | 12 | 12 | 23 | 11 | 14 | 47 | 35 |
| 25 | 96 | 42 | 32 | 13.5 | 38 | 26 | 8 | 8 | 5.2 | 9.5 | 12 | 86 | 70 | 65 | 5.5 | 15 | 9 | 12 | 11 | 23.5 | 12 | 13.5 | 47.5 | 35.5 |
| 32 | 116 | 51 | 38 | 16 | 48 | 30 | 11 | 10 | 6.8 | 11 | 16 | 112 | 96 | 80 | 6.5 | 18 | 11 | 16 | 11.5 | 25 | 12 | 16.5 | 47.5 | 33.5 |
| 50 | 148 | 64 | 46 | 21.5 | 60 | 40 | 12 | 12 | 8.6 | 14 | 20 | 146 | 130 | 110 | 9 | 22 | — | 20 | 14 | 11 | — | — | 72 | 44 |

| Tube I.D. (mm) | | M | $M_1$ | $M_2$ | $M_3$ | $M_4$ | N | $N_1$ | $N_2$ | $N_3$ | P Plain Bushing | P Linear Bushing | Q | R | S | T | V | W |
|---|---|---|---|---|---|---|---|---|---|---|---|---|---|---|---|---|---|---|
| 12 | | M4 x 0.7 | M5 x 0.8 | M4 x 0.7 | M4 x 0.7 | M5 x 0.8 | 23 | 5 | 20 | 4+St | 8 | 6 | 40 | 2 | 50 | 8 | 19.5 | — |
| 16 | | M5 x 0.8 | M5 x 0.8 | M5 x 0.8 | M5 x 0.8 | M5 x 0.8 | 24 | 5 | 22 | 4+St | 10 | 8 | 42 | 2 | 54 | 10 | 23 | — |
| 20 | | M5 x 0.8 | Rc1/8 | M5 x 0.8 | M5 x 0.8 | M6 x 1.0 | 28 | 19 | 16 | St | 12 | 10 | 52 | 2 | 64 | 10 | 24.5 | — |
| 25 | | M6 x 1.0 | Rc1/8 | M6 x 1.0 | M6 x 1.0 | M6 x 1.0 | 34 | 22 | 12.5 | 1+St | 16 | 13 | 62 | 2 | 76 | 10 | 24 | — |
| 32 | | M8 x 1.25 | Rc1/8 | M8 x 1.25 | M8 x 1.25 | M8 x 1.25 | 42 | 22 | 14.5 | St-3 | 20 | 16 | 80 | 2 | 100 | 12 | 31 | — |
| 50 | St=25 | M10 x 1.5 | Rc1/4 | M10 x 1.5 | — | M10 x 1.5 | 66 | 24 | 21 | 24 | 25 | — | 130 | 12 | — | 16 | 47 | 36 |
| | St=50 | | | | | | | | 22 | 48 | | | | | | | | 48 |
| | St=100 | | | | | | | | 72 | 48 | | | | | | | | 48 |

| Tube I.D. (mm) | X | Z | ZA | ZB | $L_2$ Dimensions St Stroke (mm) Plain Bushing 10 | 20 | 25 | 30 | 40 | 50 | 75 | 100 | Linear Bushing 10 | 20 | 25 | 30 | 40 | 50 | 75 | 100 |
|---|---|---|---|---|---|---|---|---|---|---|---|---|---|---|---|---|---|---|---|---|
| 12 | — | — | — | — | 0 | 0 | — | 0 | 0 | 0 | 18 | 18 | 0 | 0 | — | 0 | 14 | 14 | 14 | 14 |
| 16 | — | — | — | — | 0 | 0 | — | 0 | 0 | 0 | 21 | 21 | 0 | 0 | — | 0 | 21 | 21 | 21 | 21 |
| 20 | — | — | — | — | — | 0 | — | 0 | 0 | 0 | 14 | 14 | — | 0 | — | 0 | 27 | 27 | 27 | 27 |
| 25 | — | — | — | — | — | 0 | — | 0 | 0 | 0 | 14 | 14 | — | 2 | — | 2 | 35 | 35 | 35 | 35 |
| 32 | — | — | — | — | — | — | 20 | — | — | 20 | 20 | 20 | — | — | 8 | — | — | 8 | 42 | 42 |
| 50 | 66 | 92 | 12 | 9 | — | — | 34.5 | — | — | 34.5 | — | 46 | — | — | — | — | — | — | — | — |

**$L_2$ Dimension of Configurable Stroke with Spacer Installed**

Ex. For the MGCLFN12-70,

A 5 mm spacer is mounted into a Sliding Bearing Type cylinder with a 12 mm I.D. and a 75 mm stroke.

$L_2$ = 18 mm





## Standard Stroke

| Part Number Type | Tube I.D. (mm) | St Stroke (mm) | Available Types St Stroke (mm) MGCLF 10 | 20 | 25 | 30 | 40 | 50 | 75 | 100 | MGCLB 10 | 20 | 25 | 30 | 40 | 50 | 75 | 100 |
|---|---|---|---|---|---|---|---|---|---|---|---|---|---|---|---|---|---|---|
| (Slide Bearing) MGCLF (Linear Bushing Bearing) MGCLB | 12 | 10 20 30 40 50 75 100 | • | • | — | • | • | • | • | • | • | • | — | • | • | • | • | • |
| | 16 | | • | • | — | • | • | • | • | • | • | • | — | • | • | • | • | • |
| | 20 | 20 30 40 50 75 100 | — | • | — | • | • | • | • | • | — | • | — | • | • | • | • | • |
| | 25 | | — | • | — | • | • | • | • | • | — | • | — | • | • | • | • | • |
| | 32 | 25 50 75 100 | — | — | • | — | — | • | • | • | — | — | • | — | — | • | • | • |
| | *50 | 25 50 100 | — | — | • | — | — | • | — | • | — | — | — | — | — | — | — | — |

## Spacer Installed Type

| Part Number Type | Tube Inner Dia. (mm) | Configurable Stroke in 1 mm Increment (Spacer Fitted) |
|---|---|---|
| Slide Bearing MGCLFN | 12 | 10–100 |
| | 16 | |
| Linear Bushing Bearing MGCLBN | 20 | 20–100 |
| | 25 | |
| | 32 | 25–100 |

Spacers are made of resin (POM).

| Part Number Type | Tube I.D. (mm) | Available Types (Body Price) St Stroke (mm) 10 | 20 | 25 | 30 | 40 | 50 | 75 | 100 | Spacer Available Types (+Body Price) Intermediate Stroke with Spacer (mm) 11–19 | 26–49 | 21–29 | 31–39 | 41–49 | 51–74 | 76–99 |
|---|---|---|---|---|---|---|---|---|---|---|---|---|---|---|---|---|
| MGCLFN | 12 | • | • | — | • | • | • | • | • | • | — | • | • | • | • | • |
| | 16 | • | • | — | • | • | • | • | • | • | — | • | • | • | • | • |
| | 20 | — | • | — | • | • | • | • | • | — | — | • | • | • | • | • |
| | 25 | — | • | — | • | • | • | • | • | — | — | • | • | • | • | • |
| | 32 | — | — | • | — | — | • | • | • | — | | — | — | — | • | • |
| MGCLBN | 12 | • | • | — | • | • | • | • | • | • | — | • | • | • | • | • |
| | 16 | • | • | — | • | • | • | • | • | • | — | • | • | • | • | • |
| | 20 | — | • | — | • | • | • | • | • | — | — | • | • | • | • | • |
| | 25 | — | • | — | • | • | • | • | • | — | — | • | • | • | • | • |
| | 32 | — | — | • | — | — | • | • | • | — | | — | — | — | • | • |

**Part Number Example**

| Part Number | - | St Stroke |
|---|---|---|
| MGCLB16 | - | 50 |
| MGCLFN12 | - | 70 |

| Tube I.D. (mm) | Standard Stroke Table St Stroke (mm) 10 | 20 | 25 | 30 | 40 | 50 | 75 | 100 |
|---|---|---|---|---|---|---|---|---|
| 12 | • | • | — | • | • | • | • | • |
| 16 | • | • | — | • | • | • | • | • |
| 20 | — | • | — | • | • | • | • | • |
| 25 | — | • | — | • | • | • | • | • |
| 32 | — | — | • | — | — | • | • | • |

No spacer is provided when a standard stroke is specified.

**Part Number Alterations**

| Part Number | - | St Stroke | - | (TC / TH) |
|---|---|---|---|---|
| MGCLBN25 | - | 73 | - | TH |

Available for MGCLFN and MGCLBN only.

| Alterations | Cold Weather Resistance Specification | Heat Resistance Specification |
|---|---|---|
| Code | TC | TH |
| Spec. | Usable in the ambient temperature range from -40–60°C. Changes to low temp. resistant grease, low nitrile rubber gasket, and low temp. resistance cylinder sensors are not available. | Usable in the ambient temperature range from 5–120°C. Changes to heat resistant grease, fluororubber gaskets, and cylinder sensors are not available. |