[High Precision] Dovetail Rack & Pinion Stages

Z-Axis Long Stroke

Travel per Rotation	Small	Medium	Large
Stroke	Short	Medium	Long
Load Capacity	Light	Medium	Heavy

Z-Axis Long Stroke

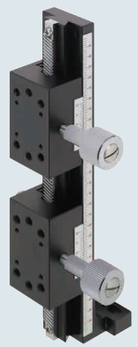

RoHS10

ZLWG
(L=50, 70, 100, 150, 150-2)

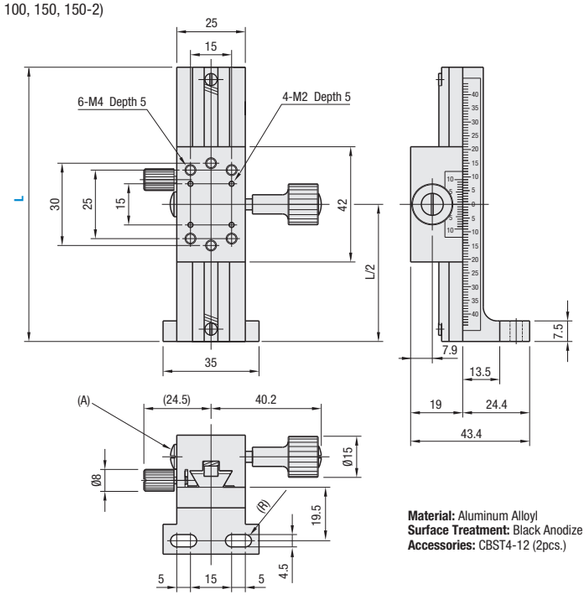

Material: Aluminum Alloyl
Surface Treatment: Black Anodize
Accessories: CBST4-12 (2pcs.)

- The scale shown is for L100. Scales will be different for L50, L70, L150, and L150-2.
- By turning the preload adjustment screw (A) clockwise with a flathead screw driver, the stage slides slowly, and by turning counterclockwise the stage slides quickly and smoothly.
- See the CAD data for the details.

Part Number Type	Part Number No.	L	Number of Blocks	Travel Distance (mm)	Travel per Knob Rotation (mm)	Load Capacity (N)	Travel Accuracy Straightness	Weight (kg)
ZLWG	50	50	1	±15	18	14.7	30µm	0.120
	70	70	1	±25				0.135
	100	100	1	±40				0.160
	150	150	1	±65			40µm	0.215
	150-2		2	±44				0.285

- Resolution (Vernier Scale Indication): 0.1 mm/division
- Knob Cover HDCVR15 (Sold Separately): increases diameter of Dovetail Stage Ø 15 knob. **P.2011**
- ZLWG150-2 has two blocks. Please note that the stroke distances will be shorter than the one block versions.
- Can be combined with Dovetail Slide Stages (**P.2020–2023**, **2025, 2028–2030**) and REG (**P.2096**).

Part Number Example

Part Number
ZLWG100

There's more on the web: misumiusa.com

[High Precision] Dovetail Feed Screw Stages

Z-Axis Square Standard / Extended Handle (Lead 4.2 mm)

Travel per Rotation	Small	Medium	Large
Stroke	Short	Medium	Long
Load Capacity	Light	Medium	Heavy

Z-Axis Square Standard
(Lead 4.2 mm)

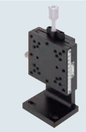

RoHS10

ZSC60

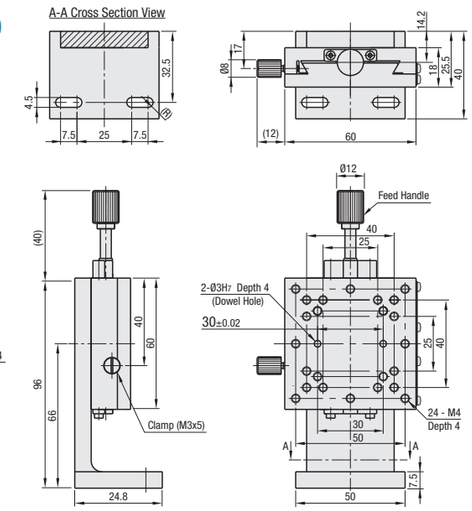

Material: Aluminum Alloy **Surface Treatment:** Black Anodize

ZSC40

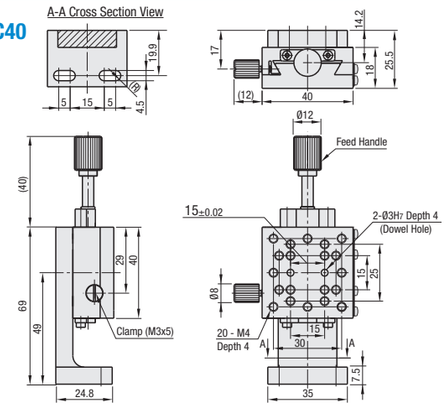

Z-Axis Extended Handle
(Lead 4.2 mm)

RoHS10

ZSCL60

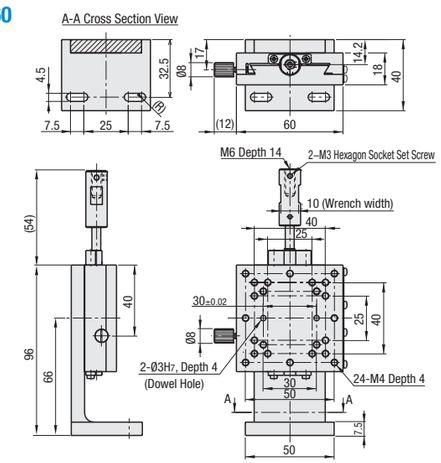

Material: (Body) Aluminum Alloy
(Feed Handle) Low Cadmium Brass
Surface Treatment: Black Anodize

ZSCL40

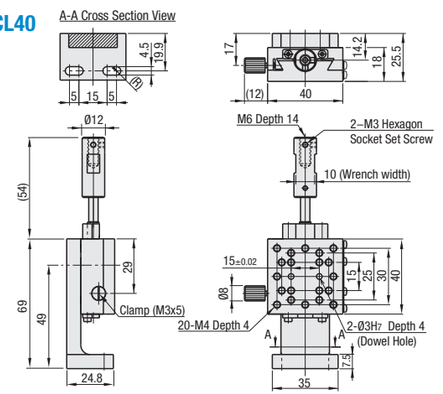

Part Number Type	Part Number No.	Stage Surface (mm)	Travel Distance (mm)	Travel per Knob Rotation (mm)	Load Capacity (N)	Travel Accuracy (µm) Straightness	Weight (kg)	Accessories (2 pcs.) Type M-L
ZSC	40	40 x 40	±11	4.2	9.8	20	0.16	CBST4-12
	60	60 x 60	±21		14.7	30	0.31	CBST4-12
ZSCL	40	40 x 40	±11		9.8	30	0.15	SCB4-14
	60	60 x 60	±21		14.7		0.28	SCB4-14

- Resolution (Vernier Scale Indication): 0.1 mm/division
- Extension Cover HDEXT12 (Sold Separately): extends Ø 12 feed screw knob. **P.2035**
- XY-Axis Mounting Plate XPLTE: Use this plate when connecting stages with non-matching mounting holes. **P.2021**

Part Number Example

Part Number
ZSC40

- **Example: Knob Extension Method**
  Handle length and diameter can be increased by utilizing the M6, Depth 14 tapped hole.
  (Example) Seven Lobed Knob **P.3222**) NKSM6-30 can be mounted to extend the handle by 36mm further.
  Use an adhesive to retain the cover to the handle.

Part Number Alterations

Part Number	- (R)
ZSC40	- R

Alteration	Knob Position Change (Left/Right Reversed)	
Spec.	ZSC__-R 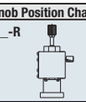	ZSCL__-R 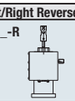
Code	R	

Check out misumiusa.com for the most current pricing and lead time.