Conveyor Belt Support Cover

Conveyor Belt Support Cover

RoHS10

Material: Stainless Steel 304

CVBCL / CVBCRL / CVBCWRL

For Ø30 (CVGA / CVGN)

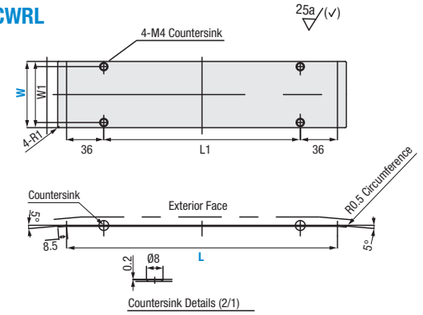

CVBCM / CVBCRM / CVBCWRM

For Ø30 with meandering prevention crosspiece (CVGB / CVGP)

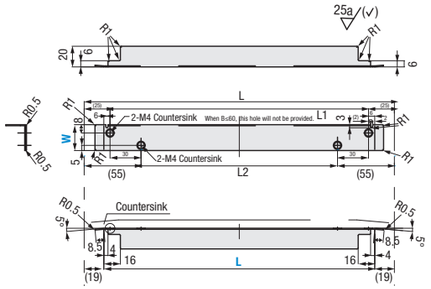

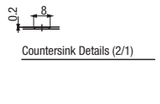

CVBCK / CVBCRK / CVBCWRK

For Ø50 (CVGC / CVGR)

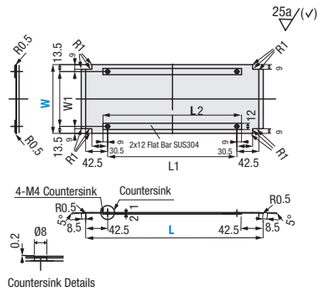

For Ø30 (CVGA / CVGN)

Part Number	W 1 mm Increment	L 1 mm Increment	W_1	L_1	Applicable Conveyors
CVBCL	40–100	130–2000	W-10	L-72	CVGA CVGN
	101–200				
	201–350				
CVBCRL	40–100			L-83	CVGN (HR / MR)
	101–200				
	201–350				
CVBCWRL	40–100			L-94	CVGN (WR)
	101–200				
	201–350				

For Ø30 with meandering prevention crosspiece (CVGB / CVGP)

Part Number	W 1 mm Increment	L 1 mm Increment	L_1	L_2	Applicable Conveyors
CVBCM	15–100	120–2000	L-50	L-110	CVGB CVGP
	101–150				
	151–200				
CVBCRM	15–100		L-61	L-121	CVGP (HR / MR)
	101–150				
	151–200				
CVBCWRM	15–100		L-72	L-132	CVGP (WR)
	101–150				
	151–200				

For Ø50 (CVGC / CVGR)

Part Number	W 1 mm Increment	L 1 mm Increment	W_1	L_1	L_2	Applicable Conveyors
CVBCK	70–100	170–2000	W-27	L-85	L-67	CVGC CVGR
	101–200					
	201–350					
CVBCRK	70–100			L-110	L-92	CVGR (HR / MR)
	101–200					
	201–350					
CVBCWRK	70–100			L-135	L-117	CVGR (WR)
	101–200					
	201–350					

Part Number Example

Part Number	-	W	-	L
CVBCM	-	150	-	1940

Application Example

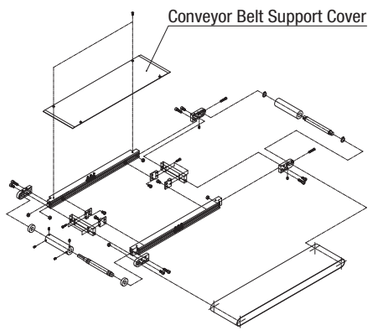

There's more on the web: misumiusa.com

Pulley Holders for Conveyor

Pulley Holders for Conveyor

Part Number	Material	Surface Treatment
PLHDR-FE	Aluminum	Clear Anodize
PLHDR-FF	Aluminum	Clear Anodize
PLHD-TC	Aluminum	Paint
PLHD-TD	Aluminum	Paint
PLHD-PA	Aluminum	Gold Anodize
PLHD-FE	Aluminum	Clear Anodize
PLHD-FF	Aluminum	Clear Anodize

PLHDR-FE-R

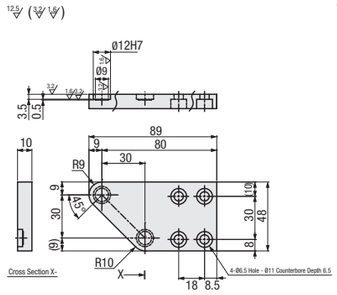

PLHDR-FF-R

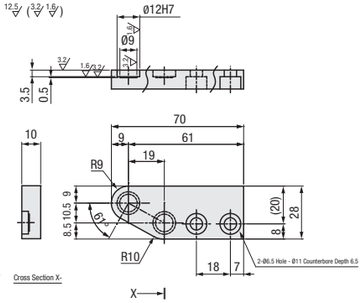

PLHD-TC-R

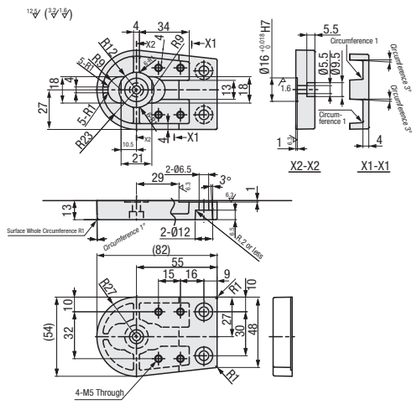

PLHD-TD-R

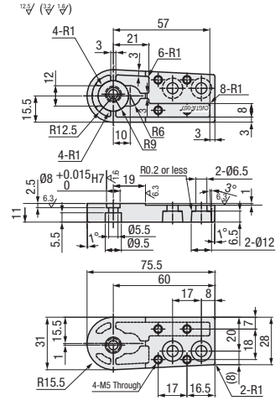

PLHD-PA-R

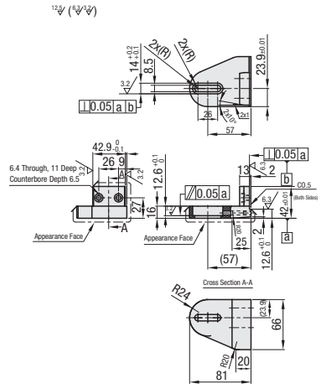

PLHD-FE-R

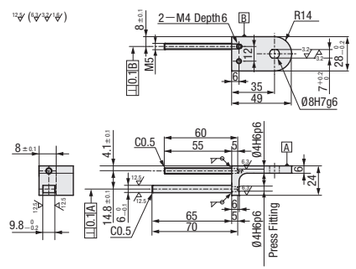

PLHD-FF-R

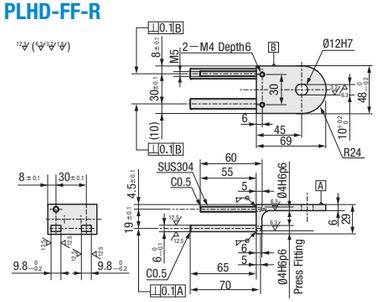

Part Number	Shape Selection	Right/Left	Applicable Conveyors	Material	Surface Treatment
PLHDR	FE	(Right) R (Left) L	CVGR	Aluminum	Clear Anodize
			CVGW		
	FF		CVGN		
			CVGP		
PLHD	TC		CVGTP		Paint
	TD		CVGTN		
	PA		CVSPA		Gold Anodize
	FE		CVSFA		Clear Anodize
			CVSFC		
	FF		CVSFB		
			CVSFD		

PLHDR is used when alterations of HR, MR, or WR are applied to the applicable conveyors.

PLHD-FE, FF, TC, and TD, which are molded products, are provided at a reasonable price.

Part Number Example

Part Number	-	Shape Selection	-	Right/Left
PLHD	-	FE	-	L

Check out misumiusa.com for the most current pricing and lead time.