Flat Belt Conveyor SV Series

Center Drive, 2-Groove Frame (Pulley Dia. 30mm)

CE Compliant

*** CE is not supported for widths of 300 and 400.**

Features: Streamlined structure has achieved the low cost. The center drive section is adjustable.

Flat Belt Conveyor SV Series – Center Drive, 2-Groove Frame (Pulley Dia. 30mm)

SVKN

*When L≥490, each slot has four (4) nuts inserted.
When counterbores for inserting nuts are required, please specify in alterations.
*1 When L≥2005, belt support rollers are mounted at these positions.

ⓘ The dimensions in the diagram are for Belt Specifications H (0.9mm thick.). Take note that belt thickness varies by Belt Specifications.
ⓘ The "Detail C" of the frame is used for pulley holder mounting. The nuts cannot be moved to this area.

	Frame	Motor Cover (1)	Motor Cover (2)	Pulley Holder
Material	Aluminum	Aluminum	Low Carbon Steel	Aluminum
Surface Treatment	Clear Anodize	Paint	Paint	Paint

6W Motor Type

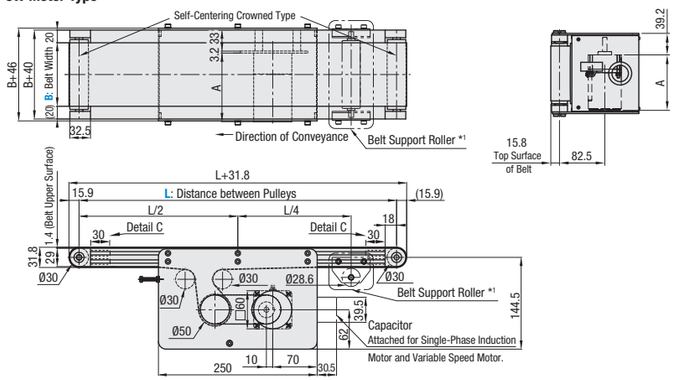

25W, 40W, 60W, 90W Motor Type

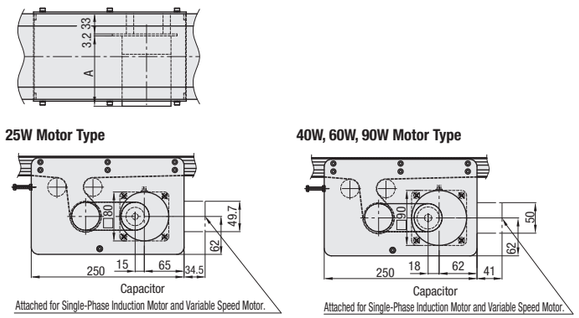

Frame Cross Section and Enlarged View

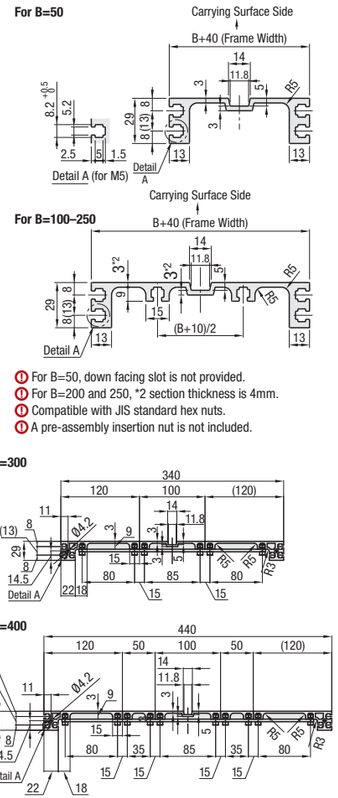

ⓘ For B=50, down facing slot is not provided.
ⓘ For B=200 and 250, *2 section thickness is 4mm.
ⓘ Compatible with JIS standard hex nuts.
ⓘ A pre-assembly insertion nut is not included.

Motor Specifications

Output (W)	Motor Specification	Motor Manufacturer	Reduction Ratio	Motor Length (A)
6W	Constant Speed Motor	Panasonic	12.5–25	101.0
			30–180	108.0
		Oriental	12.5–18	105.0
			25–180	115.0
		Taiwanese	12.5–75	119.7
			90–180	125.7
	Variable Speed Motor	Oriental	12.5–18	115.0
			25–180	125.0
		Taiwanese	12.5–75	131.9
			90–180	137.9
25W	Constant Speed Motor	Panasonic	5–180	115.0
		Oriental	5–18	117.0
			25–180	127.5
		Taiwanese	5–75	129.0
			90–180	136.0
	Variable Speed Motor	Oriental	5–18	127.0
			25–180	137.5
		Taiwanese	5–75	139.5
			90–180	146.5
40W	Constant Speed Motor	Panasonic	5–180	142.0
		Oriental	5–18	147.0
			25–180	165.0
		Taiwanese	5–75	162.6
			90–180	171.6
	Variable Speed Motor	Oriental	5–18	157.0
			25–180	175.0
		Taiwanese	5–75	179.1
			90–180	182.1
60W	Constant Speed Motor	Panasonic	5–180	180.0
		Oriental	5–180	185.0
		Taiwanese	5–75	182.6
			90–180	191.6
	Variable Speed Motor	Oriental	5–180	215.0
		Taiwanese	5–75	194.6
			90–180	203.6
90W	Constant Speed Motor	Panasonic	5–180	195.0
		Oriental	5–180	200.0
		Taiwanese	5–75	197.6
			90–180	206.6
	Variable Speed Motor	Oriental	5–180	230.0
		Taiwanese	5–75	209.6
			90–180	218.6

Conveying Capacity

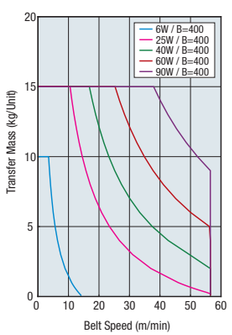

*Reference Value may different by selected Belt.

Gearhead Reduction Ratio

*Conveyance speeds are reference values based on IM (motor rotational speed 1,500 rpm [50 Hz]/1,800 rpm [60 Hz]).
*May decrease depending on load condition.

Gearhead Reduction Ratio	Belt Speed (m/min) 50Hz	60Hz
5	47.1	56.5
7.5	31.4	37.7
9	26.2	31.4
12.5	18.8	22.6
15	15.7	18.8
18	13.1	15.7
25	9.4	11.3
30	7.9	9.4
36	6.5	7.9
50	4.7	5.7
60	3.9	4.7
75	3.1	3.8
90	2.6	3.1
100	2.4	2.8
120	2.0	2.4
150	1.6	1.9
180	1.3	1.6

ⓘ For motor specification SCM, this is adjustable up to (1/15) × (max. speed). The weight that can be conveyed decreases as the speed decreases.

Flat Belt Conveyor SV Series

Center Drive, 2-Groove Frame (Pulley Dia. 30mm), *continued*

GOOD DESIGN

Conveyor Resource Site:
http://www.misumiusa.com/conveyor/
Conveyor selection, Design your own kit, & Maintenance parts search.

Part Number	Width B (mm) Selection	Length L 5mm Increment	Motor Output (W)	Motor Voltage (V)	Motor Specification	Motor Gearhead Reduction Ratio	Belt Specification	Motor Manufacturer Selection ⓘ Prices vary by manufacturer.
SVKN	50 100 150 200 250	390–3000 ⊗ L ≥ 2005 is not selectable for 6W Motor	6 25 40 60 90	(Single-Phase) TA100 TA110 TA115 T200 TA200 TA220 TA230	IM (Constant Speed Motor) SCM (Variable Speed Motor)	5 7.5 9 12.5 15 18 25 30 36 50 60 75 90 100 120 150 180 ⊗ 5–9 not applicable for 6W Motor	H (General Specifications, Green) W (General Specifications, White) G (For Sliding, Green) S (For Sliding, White) D (For Electronic Parts Transfer) F (Food Grade, White) O (Oil Resistant, Navy Blue) N (Non-Stick Food Grade, White) J (No Belt) * For belts other than the above, select from Belt Specification below.	A (Panasonic Motor) B (Oriental Motor) C (Taiwanese Motor) *SCM (Variable Speed Motor) is not selectable for A.
			25 40 60 90	(Three-Phase) SA200 SA220 SA230	IM (Constant Speed Motor)			
	300 400		40 60 90	(Single-Phase) TA100 TA110 TA115 T200 TA200 TA220 TA230	IM (Constant Speed Motor) SCM (Variable Speed Motor)			
				(Three-Phase) SA200 SA220 SA230	IM (Constant Speed Motor)			
	50 100 150 200 250 300 400		6 25 40 60 90	NV (No Motor)	NM (No Motor)	NH (No Gearhead)		R (No Motor, Gearhead)

ⓘ Connect the motor so that the belt rotates in the direction of conveyance.
ⓘ When "No motor, gearhead" is selected, the motor mounting hole pitch will vary depending on the motor's power rating. Please see Technical Information in our Conveyor Selection web site for the dimension details.
ⓘ When "No motor, gearhead" is selected, this unit will be delivered unassembled. The customer is to assemble the unit according to the included assembly instructions. See our Conveyor Selection site for assembly procedures and packaging details.
ⓘ It is not recommended to use the conveyor while it is tilted, regardless of the belt specifications.

Belt Specification	Standard Belt	Optional Belt 1	Optional Belt 2	No Belt
General Purpose	H (Green), W (White), HG (Green)	—	HY (Yellow Green), HBN (Sky Blue)	J (No Belt)
For Sliding	G (Green), S (White)	—	—	
For Inclined Transfer	LG (Green), LW (White)	—	—	
Grip Type	—	GG (Green), GW (White)	GSN (Green)	
Oil Resistant	O (Navy Blue), OH (Green), OG (Green)	OW (White)	ON (White)	
Non-Stick Food Grade	N (White), NS (White)	NB (Sky Blue), NBG (Lime Green), HH (Green), HW (White)	NWN (White), NSN (Sky Blue), NGN (Lime Green), HBG (Green), HBW (White), BW (White)	
Food Grade	F (White)	KW (White), KSB (Sky Blue), PHB (Sky Blue)	PHN (Sky Blue), PWN (Sky Blue), KWN (White)	
Static Conductive	D (Black), DS (Black)	—	DG (Black)	

ⓘ If using Optional Belts, please select motor manufacturer A or B (Motor C is applicable for Standard Belt only.)
ⓘ Select a belt with a thickness of 1.0 mm or less for a motor output of 6 W.

Part Number	B	Available Types L390–400	L405–500	L505–600	L605–700	L705–800	L805–900	L905–1000	L1005–1100	L1105–1200	L1205–1300	L1305–1400	L1405–1500	L1505–1600	L1605–1700	L1705–1800	L1805–1900	L1905–2000	L2005–2200	L2205–2400	L2405–2600	L2605–2800	L2805–3000
SVKN	50	•	•	•	•	•	•	•	•	•	•	•	•	•	•	•	•	•	•	•	•	•	•
	100	•	•	•	•	•	•	•	•	•	•	•	•	•	•	•	•	•	•	•	•	•	•
	150	—	—	•	•	•	•	•	•	•	•	•	•	•	•	•	•	•	•	•	•	•	•
	200	—	—	—	•	•	•	•	•	•	•	•	•	•	•	•	•	•	•	•	•	•	•
	250	—	—	—	—	—	•	•	•	•	•	•	•	•	•	•	•	•	•	•	•	•	•
	300	—	—	—	—	—	—	•	•	•	•	•	•	•	•	•	•	•	•	•	•	•	•
	400	—	—	—	—	—	—	•	•	•	•	•	•	•	•	•	•	•	•	•	•	•	•

Part Number Example

Part Number	-	B	-	L	-	Motor: Output	-	Voltage	-	Specification	-	Gearhead Reduction Ratio	-	Belt Specification	-	Motor Manufacturer Selection
SVKN	-	100	-	1000	-	25	-	T100	-	IM	-	25	-	H	-	C

■ **Machine Weight** (With a Motor Output of 6 W)
*Reference values (may vary depending on motor manufacturer) (kg)

Belt Width B(mm)	Distance Between Pulleys L(mm) 500	1000	1500	2000	2500	3000
50	5.4	6.5	7.5	8.6	9.6	10.6
100	7.2	8.7	10.3	11.8	13.4	14.9
150	8.7	10.5	12.3	14.1	15.9	17.7
200	10.4	12.7	15	17.3	19.6	21.9
250	12	14.6	17.2	19.8	22.4	25.1
300	14.7	17.1	19.5	21.9	24.3	26.7
400	16.1	20.4	24.9	29.3	33.7	37.9

*When the motor output is 25 W, add 1.1 kg.
*When the motor output is 40 W, add 2.1 kg.
*When the motor output is 60 W, add 3.1 kg.
*When the motor output is 90 W, add 3.6 kg.

Part Number Alterations

Specify Drive Section Position
Additional Counterbores
Roller Edge
Motor Cover with Window
Brackets for Speed Controller Included
Post-Assembly Insertion Nuts Included
Motors with Electromagnetic Brake
Stands (Legs)

For details of alterations, see **P.1276**.