[High Precision] Motorized Rotary Stages - Ball Screw

Spec.Change
Printed in Purple

Features: Motorized Rotary Stages suitable for repeatedly being driven at fine angle.

For CAD data, see the MISUMI website.

Rotary Stage

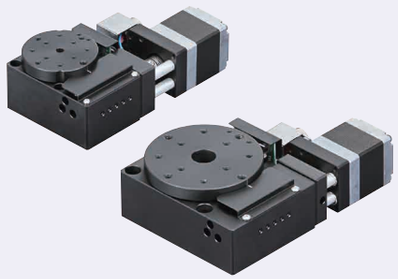

M Material: Aluminum Alloy
S Surface Treatment: Black Anodize
A AccessoryRMBG40C: SCB3-25 (3 pcs.)
RMBG60C: SCB4-25 (3 pcs.)

For Controllers, Handset Terminals, see P.1-1735-93~P.1-1735-94

Part Number		Cable	Mechanical Standards			Accuracy Standards
Type	No.		Stage Surface (mm)	Travel Distance (°)	Weight (kg)	Moment Rigidity ("/N•cm)
RMBG	40C	N (Cable not included (separately sold)) The cable is separately sold. For cables separately sold, see MSCB_ option on P.1-1735-95	Ø40	±8.5°	0.5	0.52
	60C		Ø60	±5.5°	0.7	0.25

Ordering Example: Part Number - Cable → RMBG40C - N

Days to Ship: Configure Online

RMBG40C

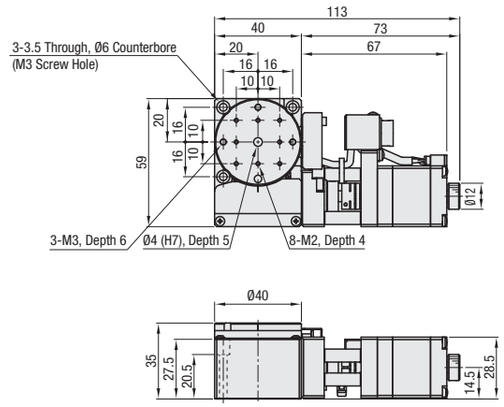

RMBG60C

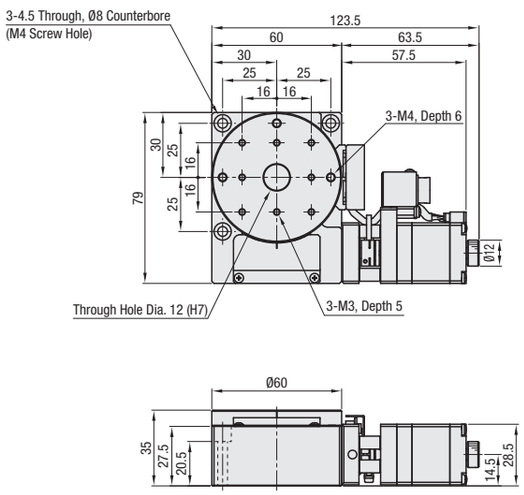

See the CAD data for detailed dimensions.

Common Specifications

No.	40C	60C
Feed Screw	Ball Screw Ø6, Lead 1	
Guide	Combined Angular Contact Ball Bearings	
Resolution (Pulse)	≈0.0067°(Full)	≈0.0042°(Full)
Max. Speed	102°/sec[15khz]	64°/sec[15khz]
Positioning repeatability	Within ±0.003°	
Load Capacity	39.2N	58.8N
Lost Motion	0.003°	
Backlash	0.01°	
Parallelism	50μm or less	

Electrical Specifications

Motor	Type	5-Phase Stepping Motor 0.75A/Phase (Oriental Motor Co., Ltd.)
	Part Number	C005C-90215P
	Step Angle	0.72°
Connector	Part Number	HR10A-10J-12P (73) (Hirose Electric Co., LTD.)
	Compatible Receptacle Connector	HR10A-10P-12S (73) (Hirose Electric Co., LTD.)
Sensor	Limit Sensor	Provided
	Home Sensor (ORG1)	Provided
	Slit Home Origin Sensor (ORG2)	Not Provided
	Part Number	Photomicrosensor: EE-SX4320 (OMRON Corp.)
	Power Supply Voltage	DC5~24V ±10%
	Current Consumption	30mA or less
	Control Output	NPN Open Collector Output DC30V or less, 50mA or less Residual Voltage 1V or less (when load current is 16mA) Residual Voltage 2V or less (when load current is 50mA)
	Output Logic	Detecting (Dark): Output Transistor OFF (Non-Conducting)

Sensors with Part Number EE-SX4134 will be discontinued and replaced by next-generation products with Part Number EE-SX4320 from November 2018.

Connector Pin Configuration

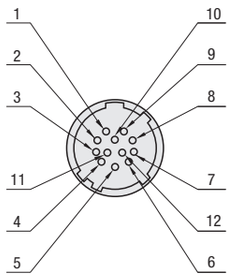

Wiring Diagram

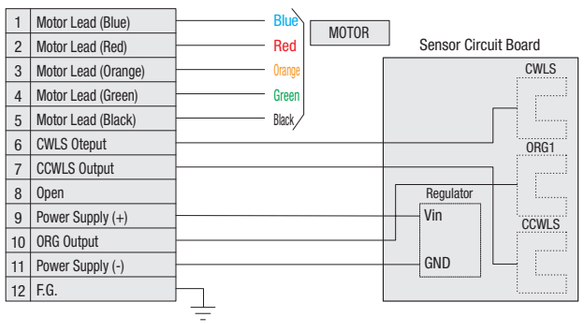

Timing Chart

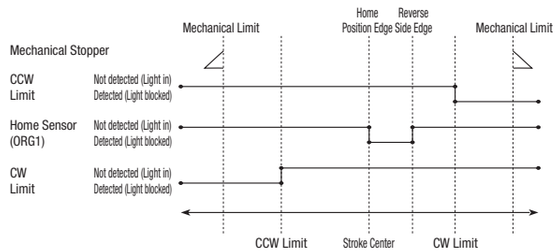

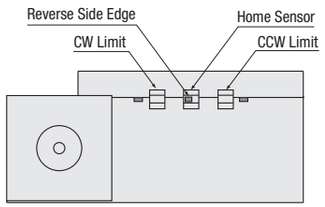

CW Direction ◄ ► CCW Direction

Travel Distance (deg)	Reference Position	CW Limit	Home Position Edge Stroke Center	Reverse Side Edge	CCW Limit
40	Stroke Center	9.0	0	4.5	9.0
60	Stroke Center	6.0	0	2.5	6.0

The coordinates shown are design values. There may be approx. ±0.5 deg misalignment on the physical dimensions.
For details about Homing, see P.1-1735-97