Hexagonal Posts –Both Ends Tapped–

The Hex Posts are provided in 1018 steel and 304 stainless steel. Choose from standard length dimension or a customizable version where lengths and thread specifications are user selectable.

Material	Surface Treatment	Type: Standard	Type: Configurable Length	Type: Configurable Length, Selectable Thread
1018 Steel	Black Oxide	U-LSBRK	U-LSFB	U-LSBF
	Electroless Nickel Plating	U-PLSBRK	U-PLSFB	U-PLSBF
304 Stainless Steel	-	U-SLSBRK	U-SLSBFA	U-SLSBF

Material Characteristics P.628, 629

• Standard
• Configurable Length

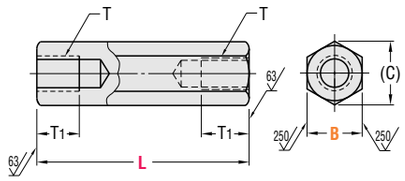

• Configurable Length, Selectable Thread

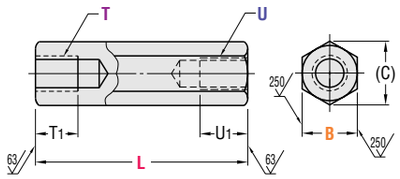

General Tolerance
Unless otherwise specified use the table below.

From	To	Tolerance
0.000	5.000	±0.01
5.001	16.000	±0.02
16.001	60.000	±0.05

Thread or hole location tolerance: ±0.005" non-cumulative.

"L" tolerance is below.

Surface Roughness: Unless otherwise specified 1000/

Standard

Part No. Type	B Callout	B Nominal	B Actual	L Selection 1"	1-1/2	2"	2-1/2	3"	3-1/2	4"	5"	6"	T (Thread) Size	Major Dia.	T1	(C)
U-LSBRK U-PLSBRK U-SLSBRK	0.38	3/8	0.375	1.00	1.50	2.00	2.50	3.00		4.00			1/4-20	0.250	0.50	0.42
	0.50	1/2	0.500		1.50	2.00	2.50	3.00	3.50	4.00			5/16-18	0.313	0.63	0.56
	0.63	5/8	0.625			2.00	2.50	3.00	3.50	4.00	5.00		3/8-16	0.375	0.75	0.70
	0.75	3/4	0.750				2.50	3.00	3.50	4.00	5.00	6.00	1/2-13	0.500	1.00	0.84

Configurable Length

Part No. Type	B Callout	B Nominal	B Actual	L Choose in 0.01" Increments	T (Thread) Size	Major Dia.	T1	(C)
U-LSFB U-PLSFB U-SLSBFA	0.38	3/8	0.375	1.00 ~ 14.00	1/4-20	0.250	0.50	0.42
	0.50	1/2	0.500	1.00 ~ 16.00	5/16-18	0.313	0.63	0.56
	0.63	5/8	0.625	1.50 ~ 20.00	3/8-16	0.375	0.75	0.70
	0.75	3/4	0.750	2.00 ~ 20.00	1/2-13	0.500	1.00	0.84
	1.00	1"	1.000	2.50 ~ 24.00	5/8-11	0.625	1.25	1.12

When L≤2xT1, the post will be fully threaded.

When L≤2.5xT1, pilot holes may be through.

Configurable Length, Selectable Thread

Part No. Type	B Callout	B Nominal	B Actual	L Choose in 0.01" Increments	T, U Thread Selection (Callout) #8-32	#10-32	1/4-20	5/16-18	3/8-16	1/2-13	5/8-11	(C)
U-LSBF U-PLSBF U-SLSBF	0.38	3/8	0.375	1.00 ~ 14.00	8	10	0.25					0.42
	0.50	1/2	0.500	1.00 ~ 16.00	8	10	0.25	0.31				0.56
	0.63	5/8	0.625	1.50 ~ 20.00		10	0.25	0.31	0.38			0.70
	0.75	3/4	0.750	2.00 ~ 20.00		10	0.25	0.31	0.38	0.50		0.84
	1.00	1"	1.000	2.50 ~ 24.00				0.31	0.38	0.50	0.63	1.12

Selection Criteria: L≥T1+U1

Please refer to the table below for technical information.

Technical Information

T, U (Thread) Callout	Size	Major Dia.	T1, U1 Thread Depth
8	#8-32	0.164	0.33
10	#10-32	0.190	0.38
0.25	1/4-20	0.250	0.50
0.31	5/16-18	0.313	0.63
0.38	3/8-16	0.375	0.75
0.50	1/2-13	0.500	1.00
0.63	5/8-11	0.625	1.25

L (Length) Tolerance

L From	To	Tolerance
1.00	12.00	±0.010
12.01	24.00	±0.015

Order Example

Standard & Configurable Length

Part No. – L
Type B
U-LSFB 0.38 – L 2.25

Configurable Length, Selectable Thread

Part No. – L – T – U
Type B
U-LSBF 0.38 – L 2.00 – T 8 – U 0.25

Optional Modification

Part No. – L – T – U – (Ordering Code)
Type B
U-LSBF 0.38 – L 2.00 – T 8 – U 0.25 – LKC

Not available for "Standard".

Optional Modification	Length Tolerance Modification
	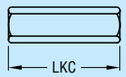
Ordering Code	LKC
Detail	Changes the length tolerance to values shown below. L From 1.00 To 12.00 Tolerance ±0.002; L From 12.01 To 24.00 Tolerance ±0.004. Example LKC
$ Price Adder	4.00

When using Optional Modification, add the "Price Adder" to the standard "Unit Price".

Price

Quantity Discount Rate

Quantity	1~4	5~9	10~19	20~
Rate(1day)	—	2%	3%	5%
Rate(Others)	—	5%	10%	15%

For larger quantity orders "Days to Ship" may differ from published catalog term. P.29

Days to Ship

Standard
1 Day

Configurable Length & Configurable Length, Selectable Thread

Standard
6 Days — Non-Returnable P.30

Express
4 Days (Specify Express A) $ 8.00/piece P.30

A flat charge of $21.60 for 3 or more identical pieces.

Standard

Part No. Type	B	$ Unit Price (Qty. 1~4) Min. L ~ 2.00	L2.50 ~ 4.00	L5.00 ~ 6.00
U-LSBRK	0.38	3.00	3.10	-
	0.50	3.20	3.40	-
	0.63	3.50	3.70	4.00
	0.75	-	4.30	4.40
U-PLSBRK	0.38	3.20	3.50	-
	0.50	3.60	3.80	-
	0.63	4.10	4.30	4.60
	0.75	-	4.90	5.20
U-SLSBRK	0.38	3.50	3.80	-
	0.50	4.10	4.20	-
	0.63	4.90	5.20	5.40
	0.75	-	6.00	6.20

Configurable Length, Selectable Thread

Part No. Type	B	$ Unit Price (Qty. 1~4) Min. L ~ 8.00	L8.01 ~ 16.00	L16.01 ~ 24.00
U-LSBF	0.38	7.70	8.90	-
	0.50	8.50	9.70	-
	0.63	9.70	12.50	15.60
	0.75	10.80	13.60	17.30
	1.00	11.60	15.00	19.30
U-PLSBF	0.38	8.90	10.10	-
	0.50	9.80	11.00	-
	0.63	11.00	14.20	18.00
	0.75	12.50	15.70	19.90
	1.00	13.60	17.30	22.20
U-SLSBF	0.38	9.50	11.80	-
	0.50	10.60	13.10	-
	0.63	13.40	18.70	24.20
	0.75	14.80	21.50	28.20
	1.00	18.40	27.20	39.60

Configurable Length

Part No. Type	B	$ Unit Price (Qty. 1~4) Min. L ~ 8.00	L8.01 ~ 16.00	L16.01 ~ 24.00
U-LSFB	0.38	6.50	7.20	-
	0.50	7.10	8.00	-
	0.63	7.80	10.10	12.70
	0.75	8.90	11.40	14.30
	1.00	9.70	12.50	16.10
U-PLSFB	0.38	7.30	8.30	-
	0.50	8.00	9.10	-
	0.63	9.00	11.60	14.60
	0.75	10.20	13.00	16.40
	1.00	11.00	14.20	18.40
U-SLSBFA	0.38	8.00	9.50	-
	0.50	8.90	10.90	-
	0.63	10.90	15.60	17.50
	0.75	12.50	17.90	23.20
	1.00	15.20	22.80	33.10
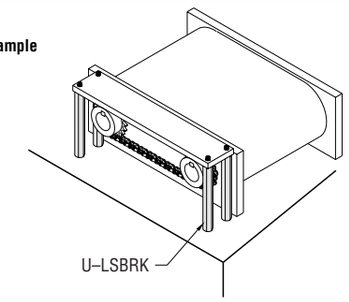
Example