Shaft Supports –Base Mount–

The Base Mount Shaft Supports are suitable for applications requiring free-standing linear shaft installations. Various mounting options are available to choose from.

Side Slit

Material	Surface Treatment	Included Hardware & Material	Type
1045 Steel	Electroless Nickel Plating	Stainless Steel S.H.C.S. (1 Piece)	U-SHWTM
304 Stainless Steel	-		U-SHWTS

Material Characteristics P.628, 629

The slit is manufactured after the hole D is bored at indicated tolerance. The tolerance may vary slightly depending on the machining condition.

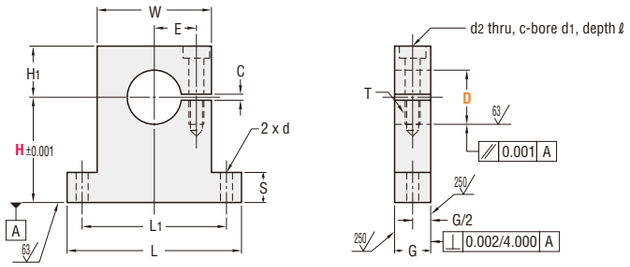

Surface Roughness: Unless otherwise specified 1000

General Tolerance
Unless otherwise specified use the table below.

From	To	Tolerance
0.000	5.000	±0.01
5.001	16.000	±0.02
16.001	60.000	±0.05

Thread or hole location tolerance: ±0.005" non-cumulative.

Type	Part No. D Callout	Nominal	Tolerance		H Selection (Callout) 3/4	1"	1-1/4	1-1/2	1-3/4	2"	2-1/2	$ Unit Price (Qty. 1~4) U-SHWTM	U-SHWTS
U-SHWTM U-SHWTS	0.38	3/8	0.3756	0.3750	0.75	1.00						14.20	37.30
	0.50	1/2	0.5007	0.5000	0.75	1.00						14.70	41.70
	0.63	5/8	0.6257	0.6250		1.00	1.25					17.10	44.80
	0.75	3/4	0.7508	0.7500			1.25	1.50				23.70	62.00
	1.00	1"	1.0008	1.0000				1.50	1.75			25.60	63.80
	1.50	1-1/2	1.5010	1.5000						2.00	2.50	45.90	100.80

Order Example

Part No. — H

Type D

U-SHWTM 0.75 — H 1.50

Technical Information

H Callout	Nominal	Actual	D	L	H1	G	S	W	L1	d Dia.	Compatible Bolt	E	T (Thread) Size	Major Dia.	Depth	d2	d1	ℓ	C
0.75	3/4	0.750																	
1.00	1"	1.000	0.38	1.75	0.281	0.375	0.25	1.00	1.375	0.180	#8	0.344	#6-32	0.138	0.276	0.154	0.281	0.154	0.079
1.25	1-1/4	1.250	0.50	1.94	0.375	0.500	0.25	1.19	1.563	0.180	#8	0.391	#8-32	0.164	0.328	0.180	0.313	0.180	0.079
1.50	1-1/2	1.500	0.63	2.32	0.469	0.500	0.31	1.38	1.844	0.206	#10	0.438	#10-32	0.190	0.380	0.206	0.375	0.206	0.079
1.75	1-3/4	1.750	0.75	2.47	0.563	0.625	0.31	1.53	2.000	0.206	#10	0.531	#10-32	0.190	0.380	0.206	0.375	0.206	0.079
2.00	2"	2.000	1.00	3.00	0.750	0.625	0.38	2.00	2.500	0.281	1/4	0.719	1/4-20	0.250	0.500	0.281	0.438	0.281	0.079
2.50	2-1/2	2.500	1.50	4.00	1.063	0.750	0.50	2.75	3.375	0.344	5/16	1.063	5/16-18	0.313	0.626	0.344	0.531	0.344	0.118

Days to Ship 1 Day

Price

Quantity Discount Rate

Quantity	1~4	5~19	20~49	50~
Rate	—	2%	3%	5%

For larger quantity orders "Days to Ship" may differ from published catalog term. P.29

Example

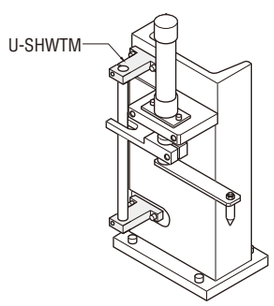

Split

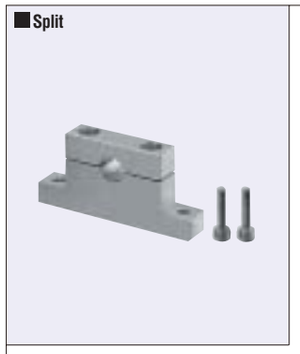

Material	Surface Treatment	Included Hardware &Material	Type
1045 Steel	Electroless Nickel Plating	Stainless Steel S.H.C.S. (2 Pieces)	U-SHPTM
304 Stainless Steel	-		U-SHPTS
6061-T6 Aluminum	Clear Anodizing		U-SHPTA

Material Characteristics P.628, 629

The slit is manufactured after the hole D is bored at indicated tolerance. The tolerance may vary slightly depending on the machining condition.

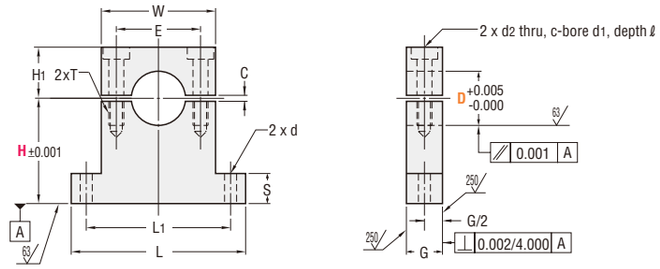

Surface Roughness: Unless otherwise specified 1000

General Tolerance
Unless otherwise specified use the table below.

From	To	Tolerance
0.000	5.000	±0.01
5.001	16.000	±0.02
16.001	60.000	±0.05

Thread or hole location tolerance: ±0.005" non-cumulative.

Type	Part No. D Callout	Nominal	H Selection (Callout) 3/4	1"	1-1/4	1-1/2	1-3/4	2"	2-1/2	$ Unit Price (Qty. 1~4) U-SHPTM	U-SHPTS	U-SHPTA
U-SHPTM U-SHPTS U-SHPTA	0.38	3/8	0.75	1.00						20.30	38.00	18.70
	0.50	1/2	0.75	1.00						23.00	45.80	21.20
	0.63	5/8		1.00	1.25					24.80	52.70	22.90
	0.75	3/4			1.25	1.50				33.30	71.70	25.70
	1.00	1"				1.50	1.75			35.10	73.30	27.00
	1.50	1-1/2						2.00	2.50	55.80	117.50	54.00

Order Example

Part No. — H

Type D

U-SHPTM 0.63 — H 1.00

Technical Information

H Callout	Nominal	Actual	D	L	H1	G	S	W	L1	d Dia.	Compatible Bolt	E	T (Thread) Size	Major Dia.	Depth	d2	d1	ℓ	C
0.75	3/4	0.750																	
1.00	1"	1.000	0.38	1.75	0.406	0.375	0.25	1.00	1.375	0.180	#8	0.688	#6-32	0.138	0.276	0.154	0.281	0.154	0.079
1.25	1-1/4	1.250	0.50	1.94	0.500	0.500	0.25	1.19	1.563	0.180	#8	0.781	#8-32	0.164	0.328	0.180	0.313	0.180	0.079
1.50	1-1/2	1.500	0.63	2.32	0.594	0.500	0.31	1.38	1.844	0.206	#10	0.875	#10-32	0.190	0.380	0.206	0.375	0.206	0.079
1.75	1-3/4	1.750	0.75	2.47	0.688	0.625	0.31	1.53	2.000	0.206	#10	1.063	#10-32	0.190	0.380	0.206	0.375	0.206	0.079
2.00	2"	2.000	1.00	3.00	0.875	0.625	0.38	2.00	2.500	0.281	1/4	1.438	1/4-20	0.250	0.500	0.281	0.438	0.281	0.079
2.50	2-1/2	2.500	1.50	4.00	1.250	0.750	0.50	2.75	3.375	0.344	5/16	2.125	5/16-18	0.313	0.626	0.344	0.531	0.344	0.118

Days to Ship 1 Day

Price

Quantity Discount Rate

Quantity	1~4	5~19	20~49	50~
Rate	—	2%	3%	5%

For larger quantity orders "Days to Ship" may differ from published catalog term. P.29

Example

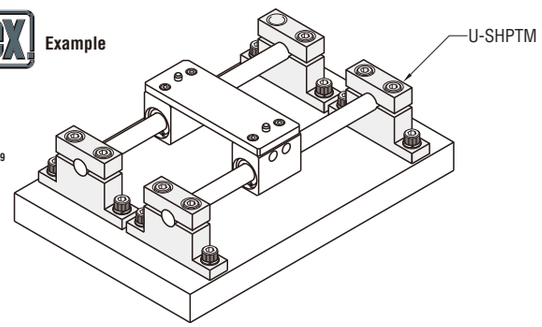

Contents
How to Use the Catalog
Linear Motion
Linear Shafts
Bushings
Shaft Supports Shaft Collars
Linear Guides
Rotary Motion
Rotary Shafts
Bearings w/ Housings
Pulleys Belts Couplings
Locating Components
Locating Pins & Bushings
Locating Components
General Components
Pivot Pins Floating Joints
Posts Device Stands Strut Clamps
Angle Plates Gussets Welded Stands
Washers Collars
Manifolds
Urethanes Rubbers
Plates
Misc.
Technical Data
Business Information
Index

Related Components

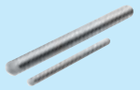

Linear Shafts P.39

Linear Bushings P.77

Express Options P.30

MiSUMi
www.misumiusa.com E-mail: inquire@misumiusa.com
TEL.1-847-843-9105 FAX.1-847-843-9107 TOLL FREE TEL.1-800-681-7475 TOLL FREE FAX.1-800-681-7402